Key to symbols

Bulb

Flashing bulb

Switch

Multiple contact switch (ganged)

Fuse/ fusible link with rating — F28 15A

Resistor

Variable resistor

Variable resistor

Wire splice, unspecified connector or soldered joint

Wire colour (brown with red tracer) — Ma/Rg

Connecting wires

Item no. — 2

Single speed pump/motor — M

Twin speed motor — M

Earth point location — E4

Diode

Light emitting diode (LED)

Solenoid actuator

Heating element

Dashed component outline denotes part of a larger item.

A3 - connector pin identification
No - connector colour (black)

A3
No

Key to circuits

Diagram 1	Information for wiring diagrams
Diagram 2	Starting, charging, horn, cigar lighter, heated screens & engine cooling fan
Diagram 3	Basic heater, headlight washer, fron & rear wash/wipe
Diagram 4	Side, head, stop, fog & reversing lights
Diagram 5	Direction indicators & hazard warning lights, courtesy lights & luggage compartment light, footwell illumination, glovebox & door lighting
Diagram 6	Front & rear electric windows, electric mirrors
Diagram 7	Central locking

Earth locations

E1	LH inner wing
E2	At LH front footwell
E3	Behind horn
E4	On front of engine
E5	RH side of rear window
E6	At RH front footwell
E7	Below LH rear light
E8	At RH front footwell

Passenger compartment fusebox 1 — 4

Fuse	Rating	Circuit protected
F1	20A	Main beam headlights
F2	10A	Passenger fusebox 1 supply, card reader, push button
F3	10A	Voice synthesiser, discharge bulb computer, instrument cluster, heater outlets, headlight levelling
F4	20A	Reversing lights, heating & ventilation, parking aid, alarm + after ignition feed signal, switch lighting, rain sensor, air conditioning compressor, wiper motor signal, autodimming rear-view mirror
F5	15A	Timed interior lighting
F6	20A	Stop lights, wiper stalk, diagnostic socket, tyre pressure monitor display, child lock indicator light, rear electric lock indicator light, electric window switch lighting, cruise control, hands-free set
F7	15A	LH dipped beam, discharge bulb computer
F8	7.5A	RH sidelights
F9	15A	Hazard warning lights
F10	10A	Communications system, radio, seat relays, seat position memory computer
F11	30A	Voice synthesiser, instrument cluster, front foglights, tailgate electric lock, air conditioning
F12	5A	Airbags & pretensioners
F13	5A	ABS computer, electronic braking distribution
F14	15A	Horn
F15	30A	Driver's electric window, electric door mirror, electric window multiplexing unit
F16	30A	Passenger's electric window, electric window multiplexing unit
F17	10A	Rear foglights
F18	10A	Heated door mirrors
F19	15A	RH dipped beam
F20	7.5A	LH sidelights, lighting dimmer, glovebox light, number plate light, cigarette lighter, switch lighting (except doors and hazard warning lights)
F21	30A	Front/rear windscreen wipers
F22	30A	Central locking
F23	15A	Rear accessories socket, car phone
F24	15A	Cigar lighter, boot accessories socket
F25	10A	Steering lock, heated rear screen relay

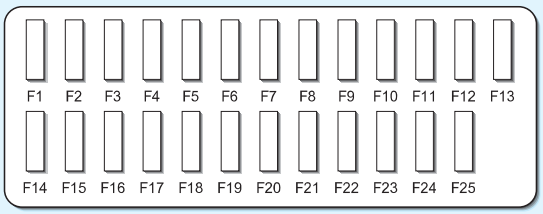

Passenger compartment fusebox 2 — 84

Fuse	Rating	Circuit protected
F26	30A	Caravan socket
F27	30A	Sunroof
F28	-	Not used
F29	30A	Rear electric windows
F30	15A	Steering wheel angle sensor
F31	-	Not used

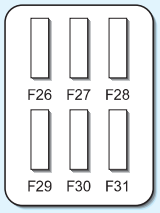

Passenger compartment fusebox 3 — 36

Fuse	Rating	Circuit protected
F32	-	Not used
F33	-	Not used
F34	15A	Driver's electric seat supply
F35	20A	Driver's & passenger's heated seats
F36	20A	Driver's electric seat
F37	20A	Passenger's electric seat

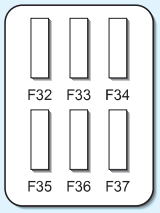

H33352

Diagram 2

Wire colours

Ba	White	**No**	Black
Be	Blue	**Or**	Orange
Bj	Beige	**Rg**	Red
Cy	Crystal	**Sa**	Pink
Gr	Grey	**Ve**	Green
Ja	Yellow	**Vi**	Violet
Ma	Brown		

Key to items

1 Battery
2 Starter
3 Alternator
4 Passenger compartment fusebox 1
5 Cigar lighter
6 Engine fusebox
7 Horn
8 Multifunction switch
9 Steering wheel clock springs
10 Horn switch
11 Engine cooling fan
12 Engine management relay
13 Fan low speed relay
14 Engine management control unit
15 Engine coolant temperature sensor
16 Heated rear window relay
17 Interference supressor (saloon)
18 Heated rear window
19 LH heated front screen relay
20 RH heated front screen relay
21 Heated front screen

H33353

Starting & charging

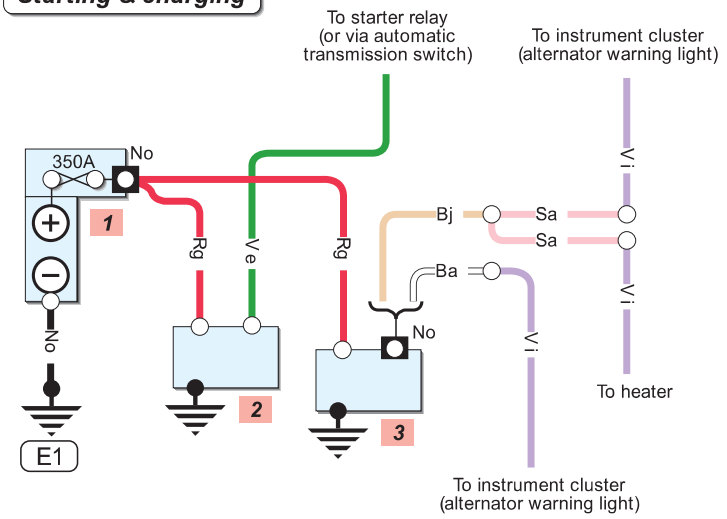

Engine cooling fan

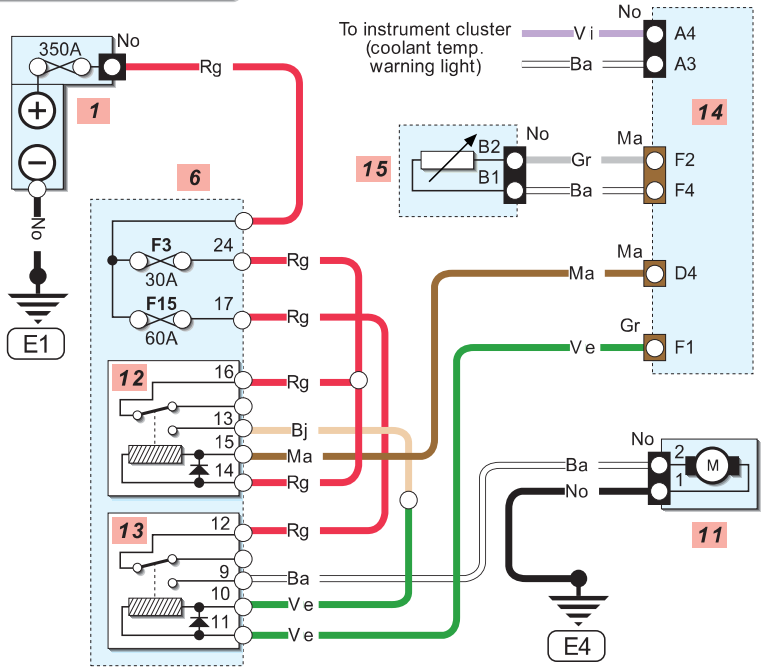

Heated rear window

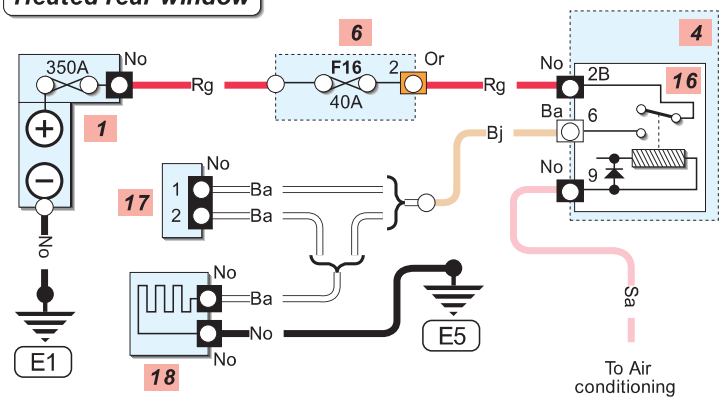

Cigar lighter

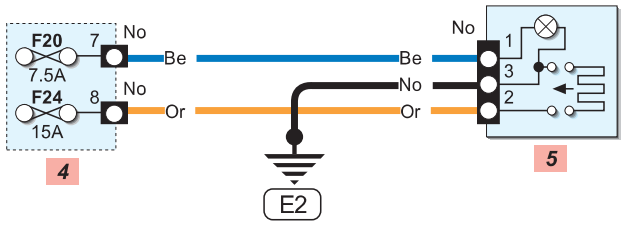

Heated front screen

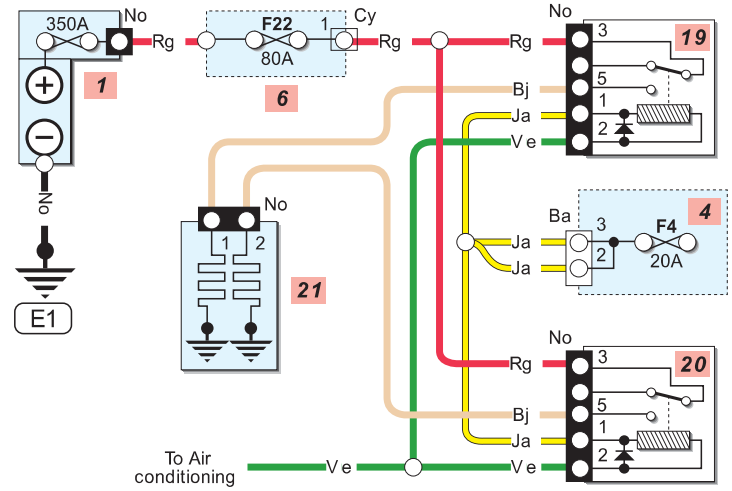

Horn

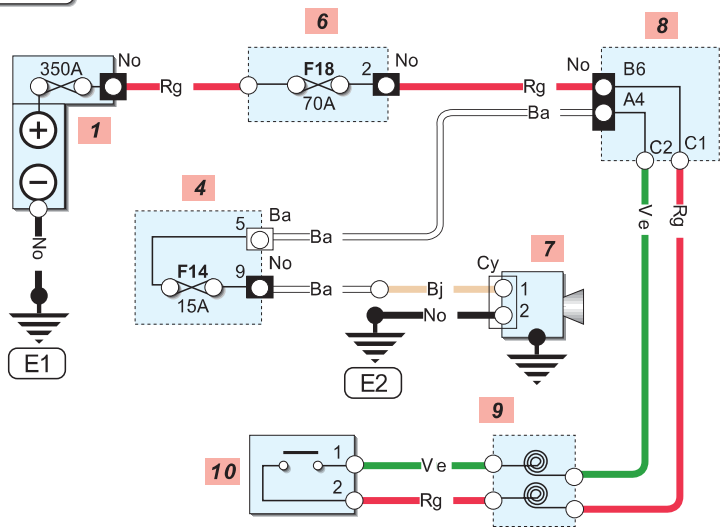

Diagram 3

Wire colours

Ba	White	**No**	Black
Be	Blue	**Or**	Orange
Bj	Beige	**Rg**	Red
Cy	Crystal	**Sa**	Pink
Gr	Grey	**Ve**	Green
Ja	Yellow	**Vi**	Violet
Ma	Brown		

Key to items

1 Battery
4 Passenger compartment fusebox 1
6 Engine fusebox
25 Air conditioning control unit
26 Heater blower resistor pack
27 Heater blower motor
28 Recycling motor
29 Evaporator sensor
30 Front/rear washer pump
31 Front wiper motor
32 Rear wiper motor
33 Wash/wipe switch
34 Rear wiper diode
35 Rain/light sensor
36 Passenger compartment fusebox 3
37 Headlight washer relay
38 Headlight washer pump

H33354

Basic heater

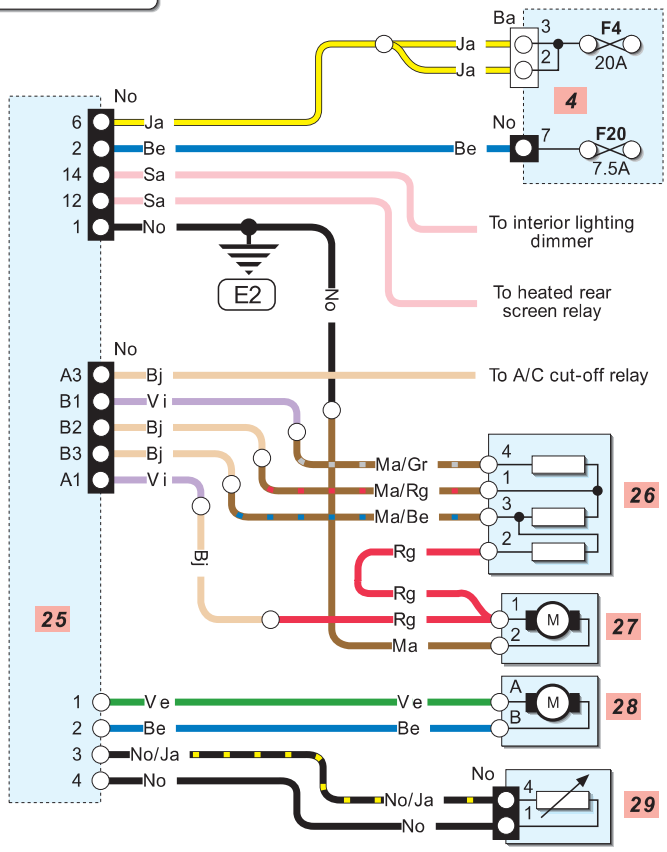

Headlight washer

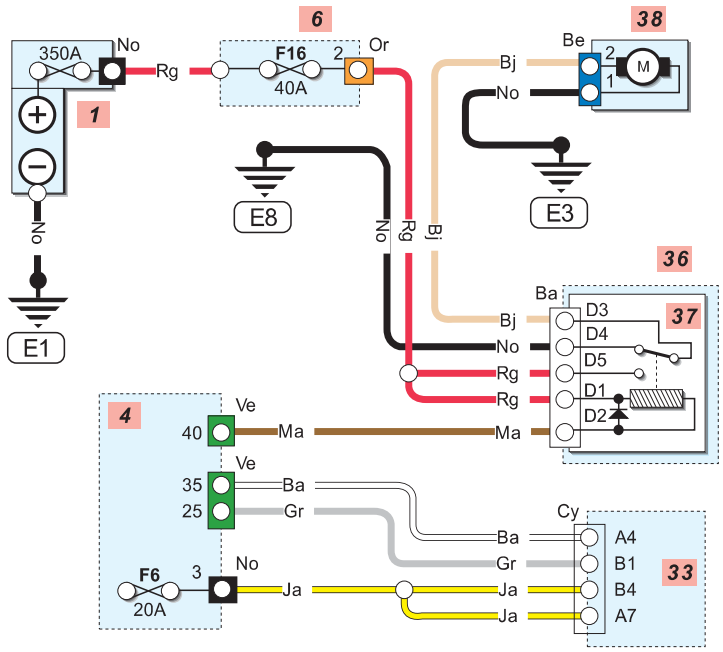

Front & rear wash/wipe

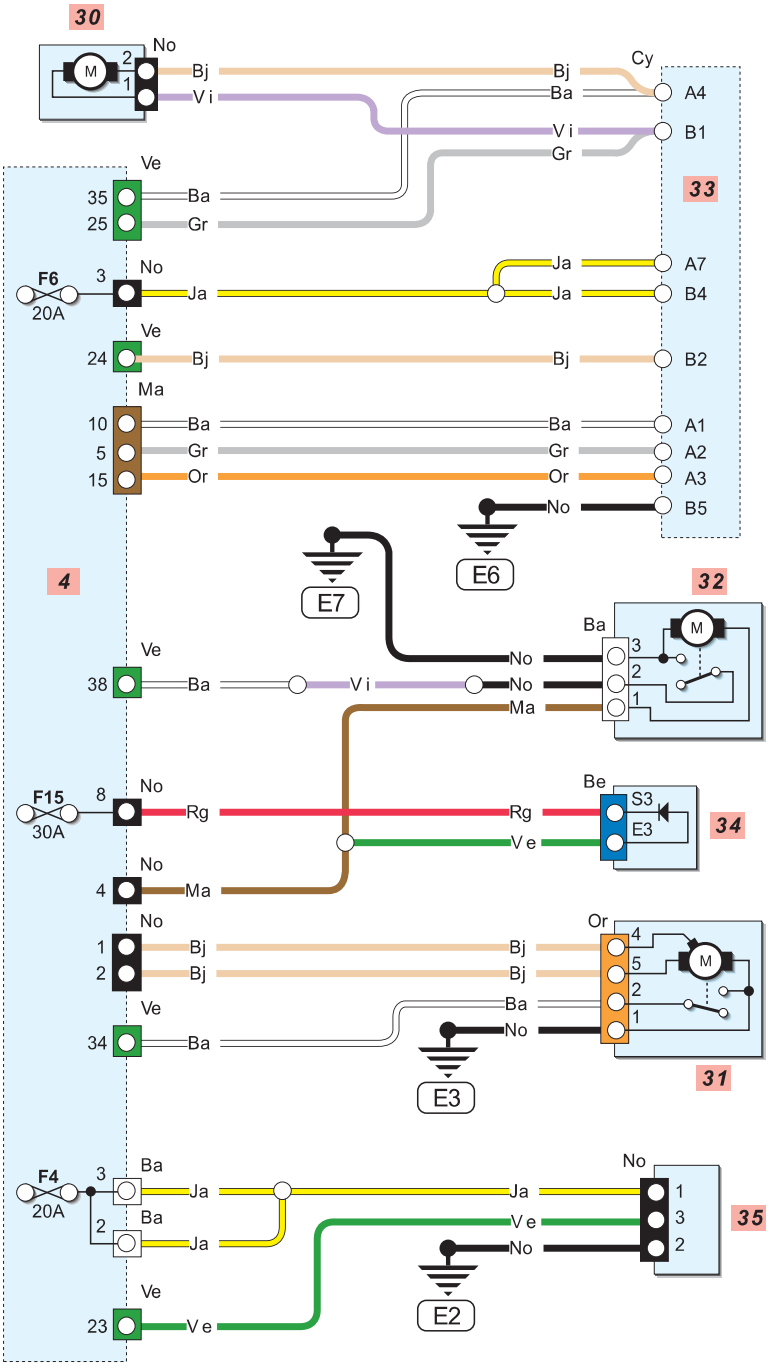

Diagram 4

Wire colours

Ba	White	**No**	Black
Be	Blue	**Or**	Orange
Bj	Beige	**Rg**	Red
Cy	Crystal	**Sa**	Pink
Gr	Grey	**Ve**	Green
Ja	Yellow	**Vi**	Violet
Ma	Brown		

Key to items

1 Battery
4 Passenger compartment fusebox 1
6 Engine fusebox
8 Multifunction switch
36 Passenger compartment fusebox 3
40 LH number plate light
41 RH number plate light
42 LH headlight
  a = sidelight
  b = dip beam
  c = main beam
43 RH headlight
  a = sidelight
  b = dip beam
  c = main beam
44 LH tailgate light unit
  a = tail light
  b = reversing light
45 RH tailgate light unit
  a = tail light
  b = reversing light
46 LH rear light unit
  a = tail light
  b = reversing light
  c = foglight
47 RH rear light unit
  a = tail light
  b = reversing light
  c = foglight
48 High level brake light
49 Reversing light switch
50 Stop light switch
51 Front foglight relay
52 LH front foglight
53 RH front foglight

H33355

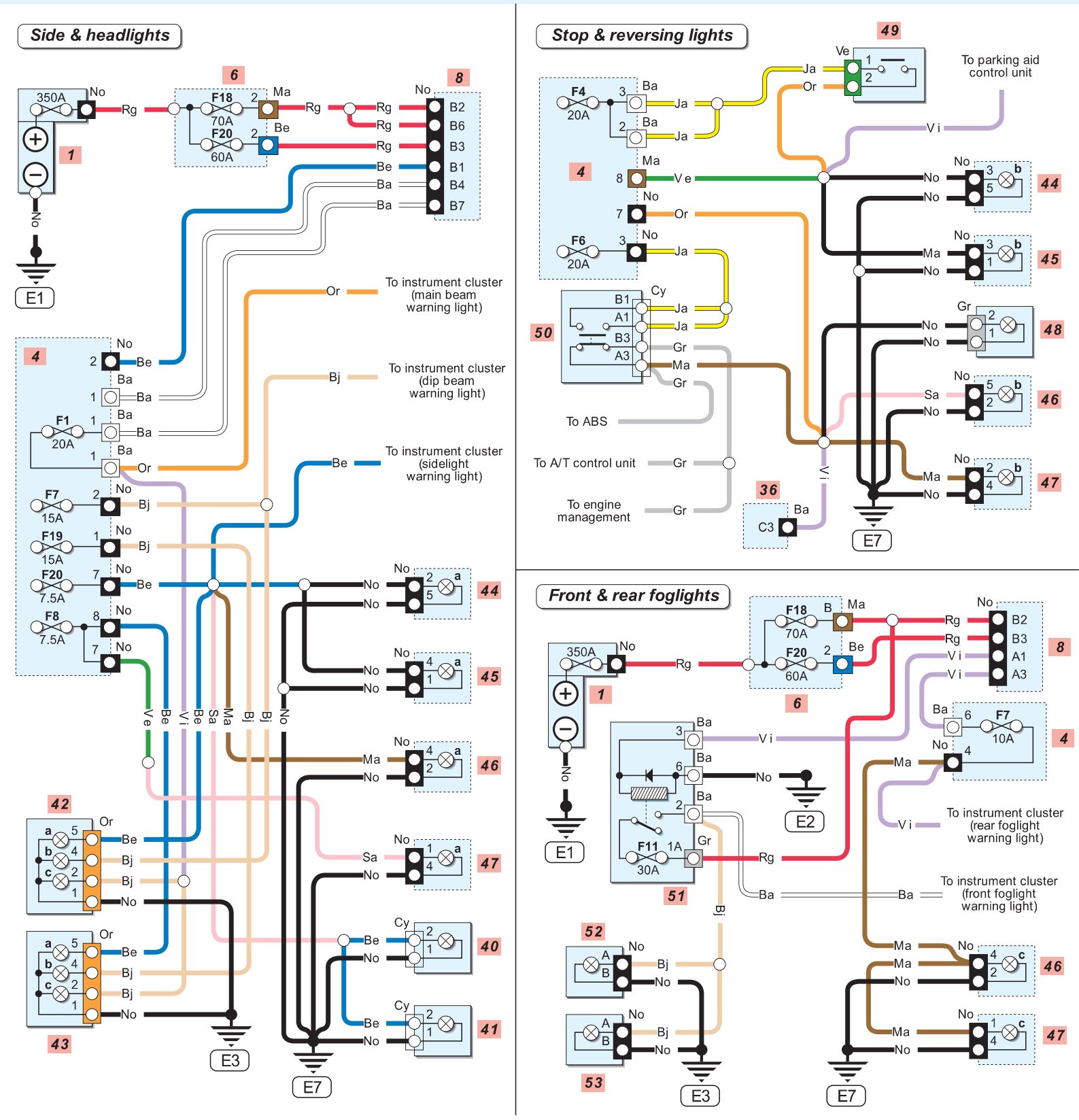

Diagram 5

Wire colours

Ba	White	**No**	Black
Be	Blue	**Or**	Orange
Bj	Beige	**Rg**	Red
Cy	Crystal	**Sa**	Pink
Gr	Grey	**Ve**	Green
Ja	Yellow	**Vi**	Violet
Ma	Brown		

Key to items

4 Passenger compartment fusebox 1
8 Multifunction switch
46 LH rear light unit
d = direction indicator
47 RH rear light unit
d = direction indicator
55 Hazard warning light switch
56 LH front direction indicator
57 RH front direction indicator
58 LH indicator side repeater
59 RH indicator side repeater
60 LH rear footwell illumination
61 LH front footwell illumination
62 RH rear footwell illumination
63 RH front footwell illumination
64 Glovebox light
65 Luggage compartment light
66 Driver's door light
67 Passenger's door light
68 LH rear door light
69 RH rear door light
70 LH Vanity mirror light
71 RH vanity mirror light
72 Vanity mirror light switch
73 Front interior light
74 LH rear interior light
75 RH rear interior light
76 Luggage compartment light/switch

H33356

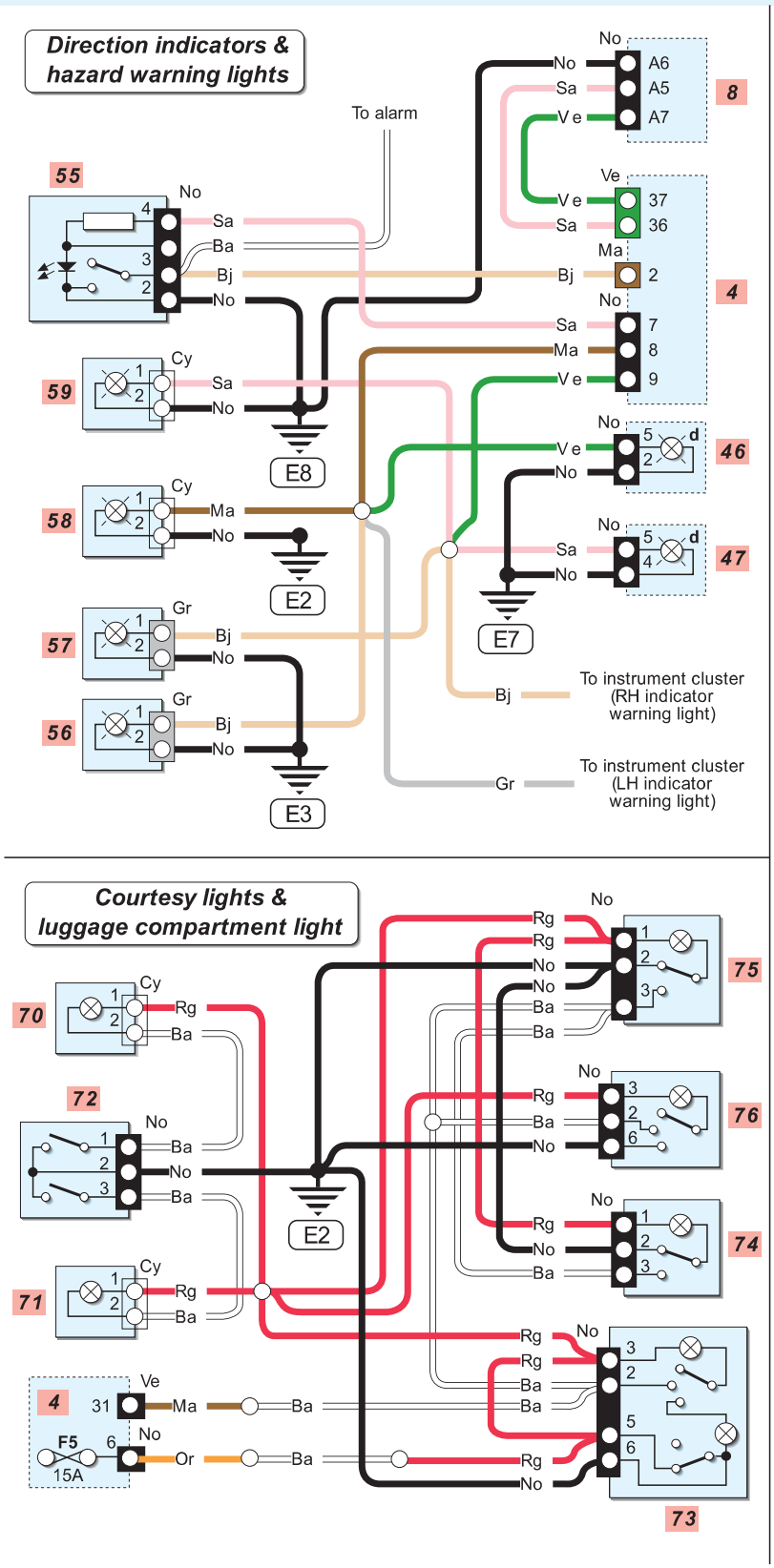

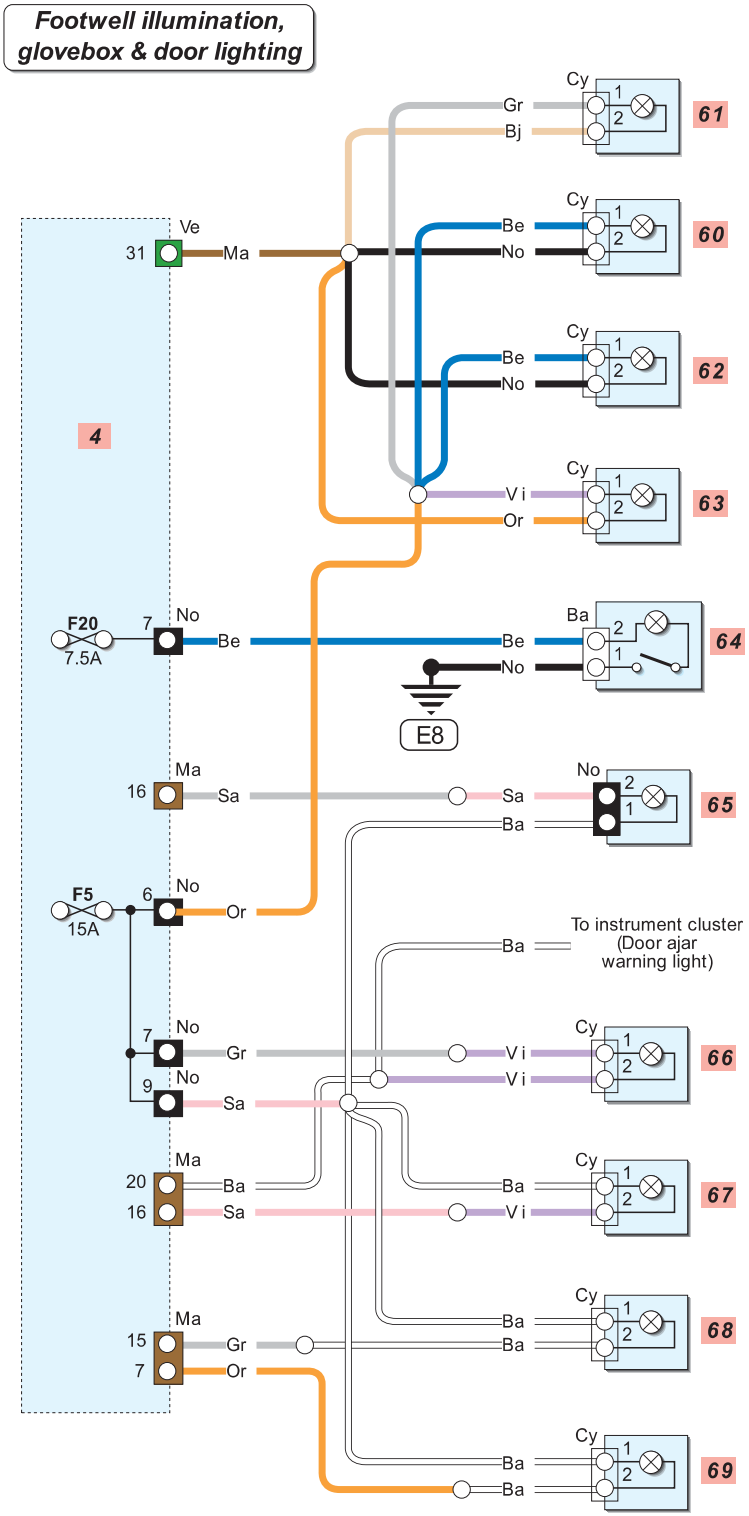

Diagram 6

Wire colours

Ba	White	**No**	Black
Be	Blue	**Or**	Orange
Bj	Beige	**Rg**	Red
Cy	Crystal	**Sa**	Pink
Gr	Grey	**Ve**	Green
Ja	Yellow	**Vi**	Violet
Ma	Brown		

Key to items

4 Passenger compartment fusebox 1
80 Driver's electric window switch
81 Passenger's electric window switch
82 Driver's window motor
83 Passenger's window motor
84 Passenger fusebox 2
85 Rear window safety switch
86 Rear window control switch
87 LH rear window switch
88 LH rear window motor
89 RH rear window switch
90 RH rear window motor
91 LH mirror assembly
92 RH mirror assembly
93 Mirror control switch

H33357

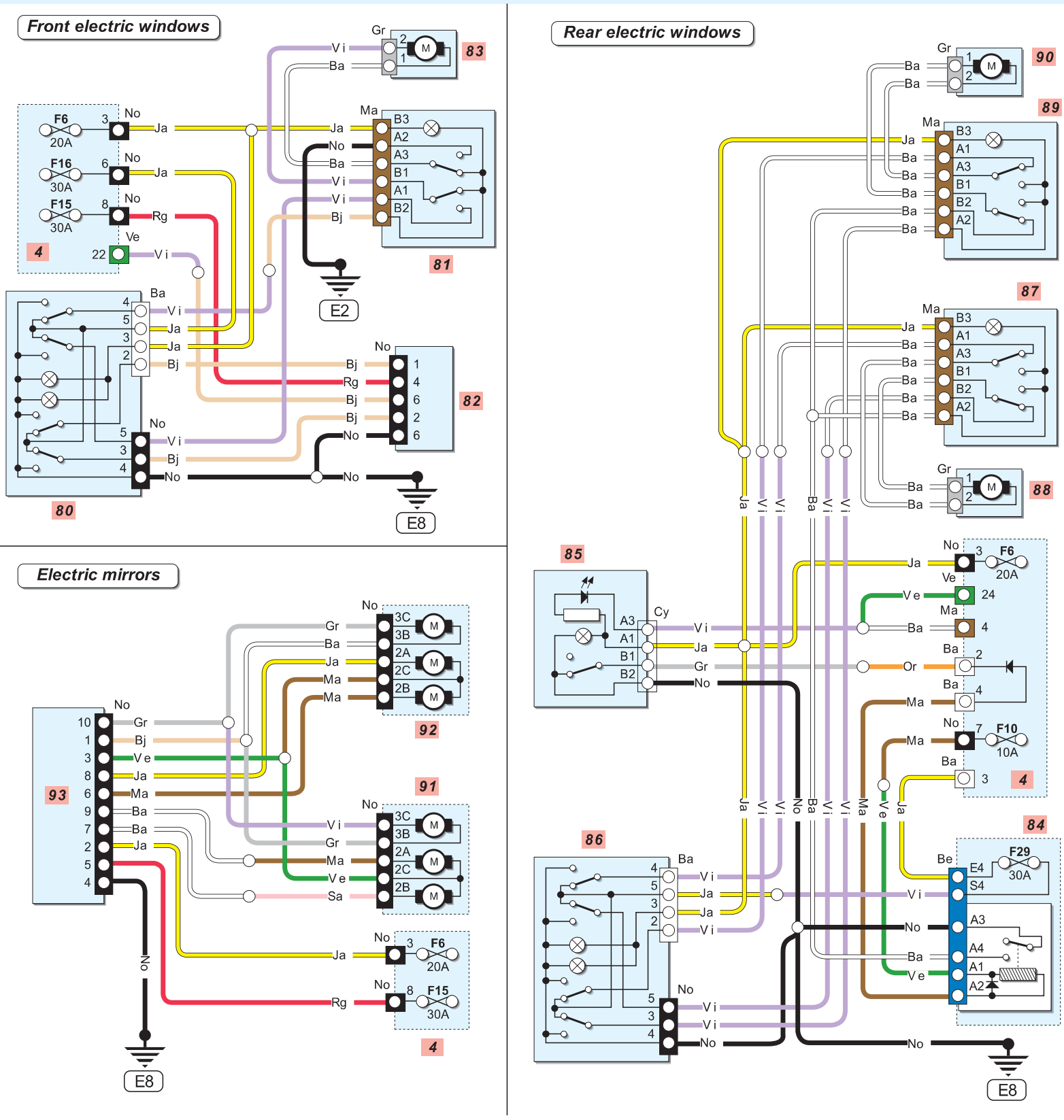

Wire colours

Ba	White	**No**	Black
Be	Blue	**Or**	Orange
Bj	Beige	**Rg**	Red
Cy	Crystal	**Sa**	Pink
Gr	Grey	**Ve**	Green
Ja	Yellow	**Vi**	Violet
Ma	Brown		

Key to items

4 Passenger compartment fusebox 1
95 Driver's door lock motor
96 Passenger's door lock motor
97 LH rear door lock motor
98 RH rear door lock motor
99 Fuel filler flap lock motor
100 Central locking control switch
101 Diode unit
102 Tailgate release motor
103 Tailgate release switch

Diagram 7

H33358
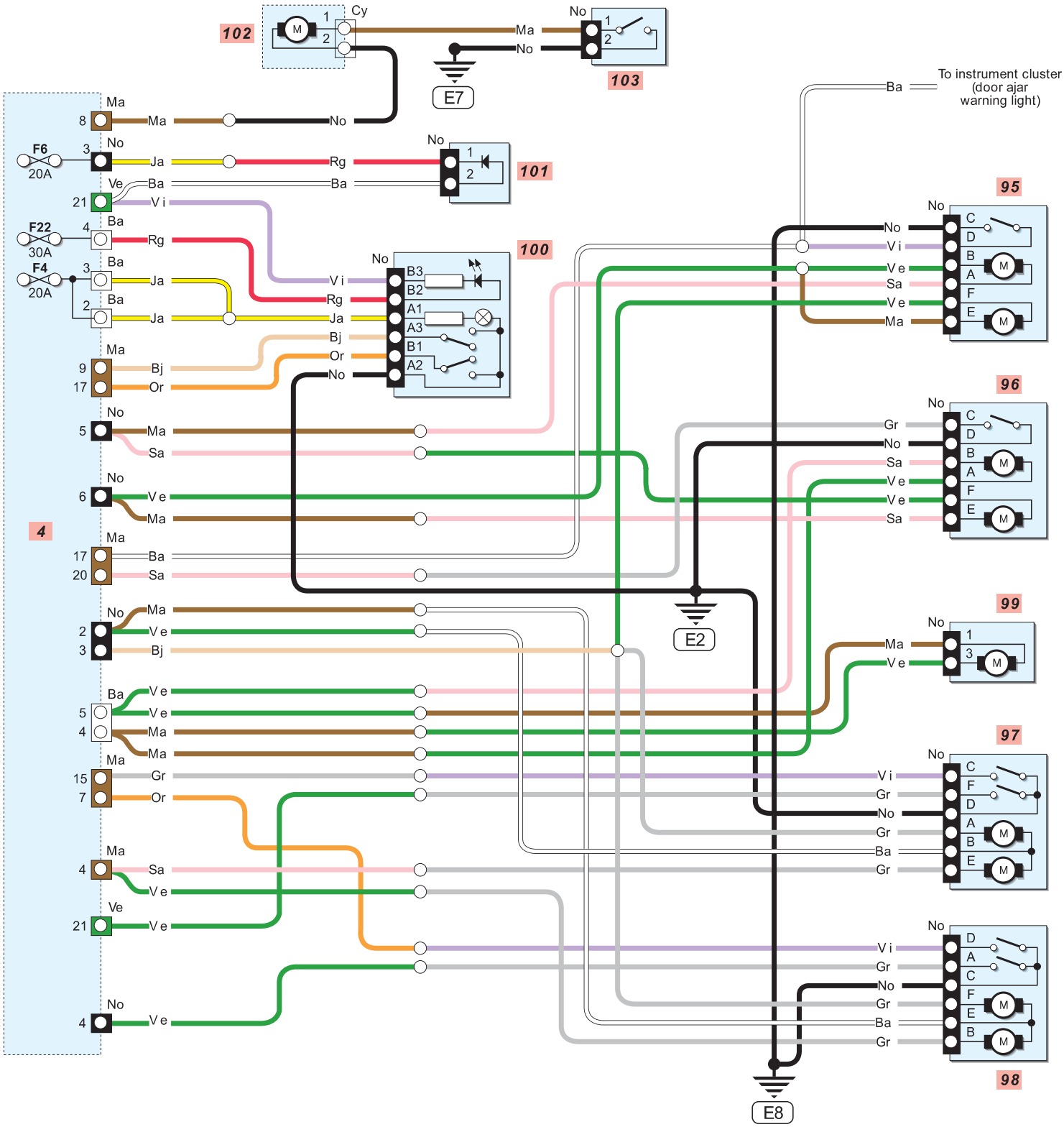
Central locking